Parts List – JOHN DEERE
PRO VAC Universal Blower

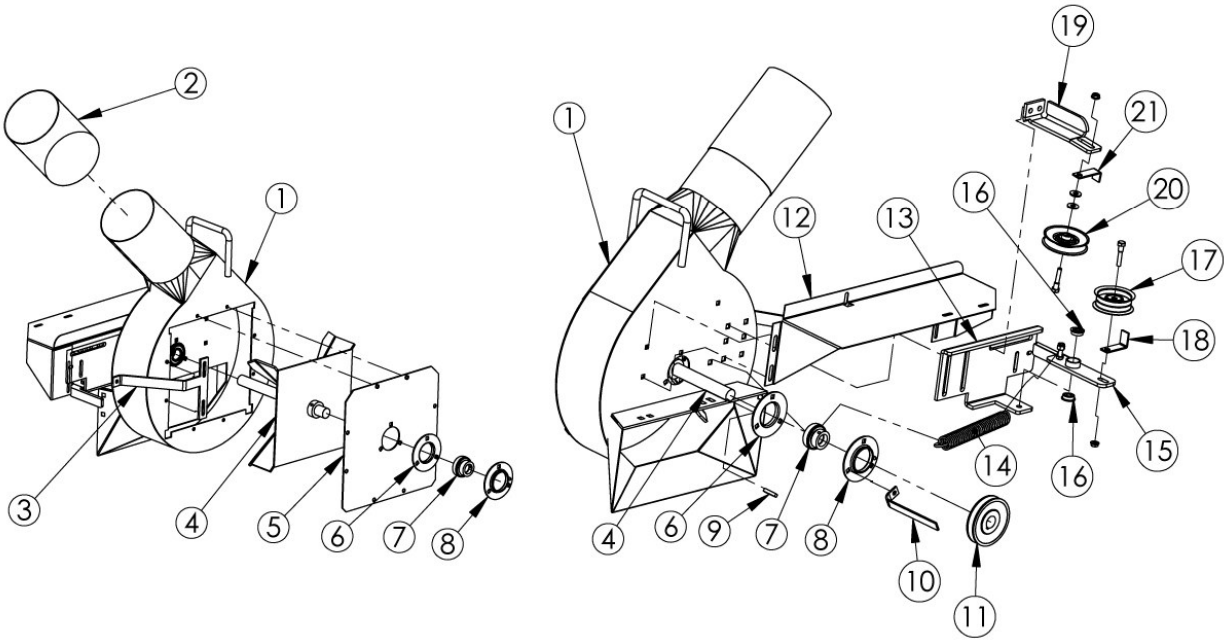

ITEM NO.	PART NUMBER	DESCRIPTION	QTY.
1	002002	Blower Canister Universal	1
2	020305	Blower Sleeve (6")	1
3	002042	Pulley Bracket Support	1
4	002011	Fan	1
5	002084	Blower Cover Plate	1
6	002160	Bearing Flangette	2
7	002150	Fan Bearing w/ Collar	2
8	002162	Bearing Flangette w/ Grease Zerk	2
9	002125	Machinery Key (1/4" x 1")	1
10	002069	Fan Pulley Belt Bracket	1
11	002418	Blower Drive Pulley (3.5")	1
12	002050	Blower Belt Cover	1
13	002040	Blower Pulley Bracket	1
14	002483	Idler Spring	1
15	002033	Idler Arm	1
16	002030	Idler Arm Bearing	2
17	016888	Flat Idler Pulley (3.25")	1
18	017103	Flat Idler Pulley Bracket	1
19	002045	V-Pulley Bracket	1
20	019188	V-Idler Pulley (3.5")	1
21	018104	V-Idler Pulley Bracket	1

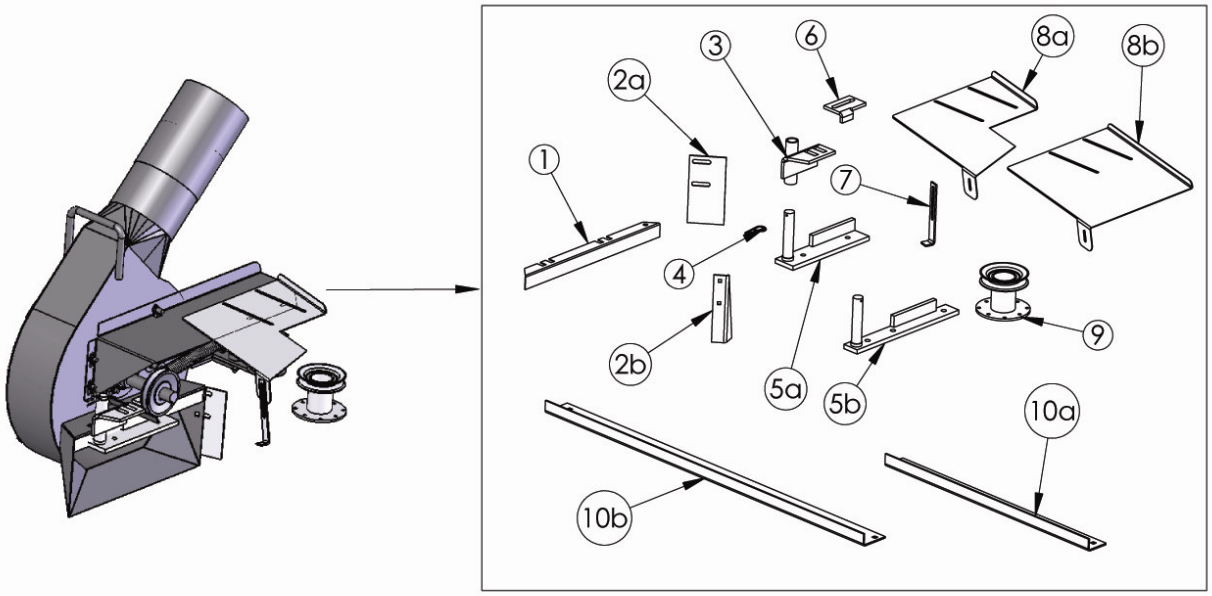

ITEM NO.	PART NUMBER	DESCRIPTION	QTY.
1	003742	Blower Blocking Plate	1
2a	003740	Blower Tab (for 54" & 60" Decks)	1
2b	003120	Blower Tab (for 72" Decks)	1
3	003701	Blower Front Mount	1
4	150995	Hair Spring Cotter #6	1
5a	003330	Blower Deck Mount (for 54" & 60" Decks)	1
5b	003320	Blower Deck Mount (for 72" Decks)	1
6	003720	Blower Support Bracket	1
7	002092	Belt Guard Leg	1
8a	002094	Belt Guard (for 54" & 60" Decks)	1
8b	002090	Belt Guard (for 72" Decks)	1
9	025106	JD 737-797 Deck Pulley	1
10a	003580	Front Baffle (for 60" Decks)	1
10b	003581	Front Baffle (for 72" Decks)	1
11	84560	BELT A54	1

	PART NUMBER	DESCRIPTION	QTY.
Blower Hardware	BOLT CAR 38 1	3/8" X 1" CARRIAGE BOLT	4
	NUT SF 38	3/8" SERRATED FLANGE NUT	4
	BP 228	BRIDGE PIN .0930X2 ZINC	1
	BOLT CAR 516 1	5/16" X 1" CARRIAGE BOLT	2
	BOLT CAR 516 34	5/16" X 3/4" CARRIAGE BOLT	2
	NUT SF 516	5/16" SERRATED FLANGE NUT	4
Belt Guard Leg	BOLT HH 14 12	1/4" X 1/2" HEX HEAD BOLT	3
	NUT SF 14	1/4" SERRATED FLANGE NUT	3
Deck Baffle	BOLT CAR 516 34	5/16" X 3/4" CARRIAGE BOLT	2
	NUT NYL 516	5/16" NYLOCK NUT	2

Parts List
PRO VAC CATCHER

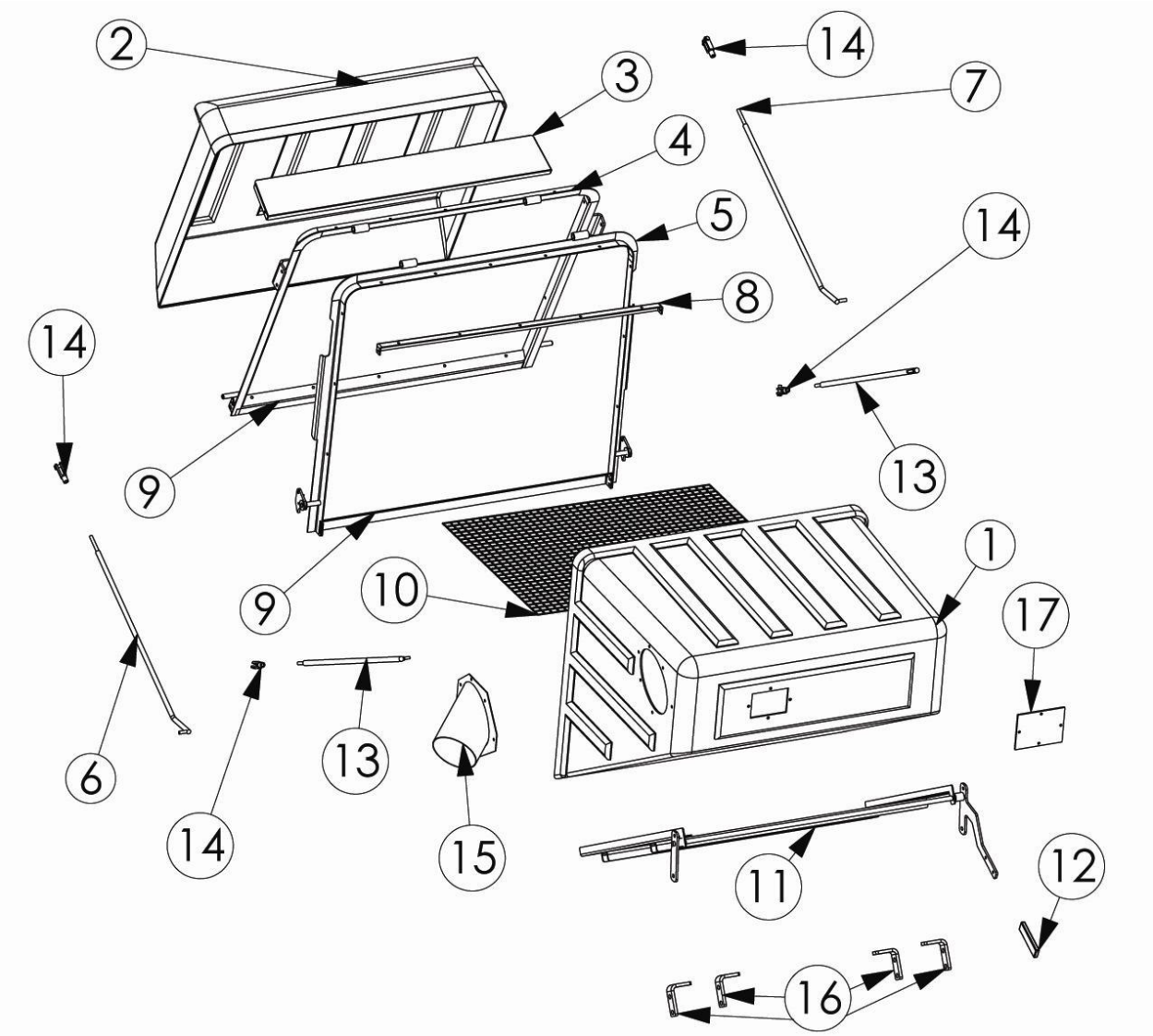

ITEM NO.	PART NUMBER	DESCRIPTION	QTY.
1	180003	Catcher Body	1
2	180002	Plastic Door	1
3	180044	Door Vent Spacer	1
4	180040	Door Frame Opening	1
5	180030	Catcher Frame Opening	1
6	180091	Hinge Rod Right	1
7	180092	Hinge Rod Left	1
8	180043	Screen Support	1
9	180034	Opening Frame Bottom	2

ITEM NO.	PART NUMBER	DESCRIPTION	QTY.
10	180077	Screen	1
11	180020	Dump Lever Assembly	1
12	180018	Dump Lever Handle	1
13	180085	Latch Rod	2
14	180081	3/8" Yoke End	4
15	180048	Intake Tube	1
16	180049	Base Frame Tab	4
17	180079	Viewing Window	1

JOHN DEERE 737/797 NON ROPS - Parts List

CATCHER MOUNTS & WEIGHT

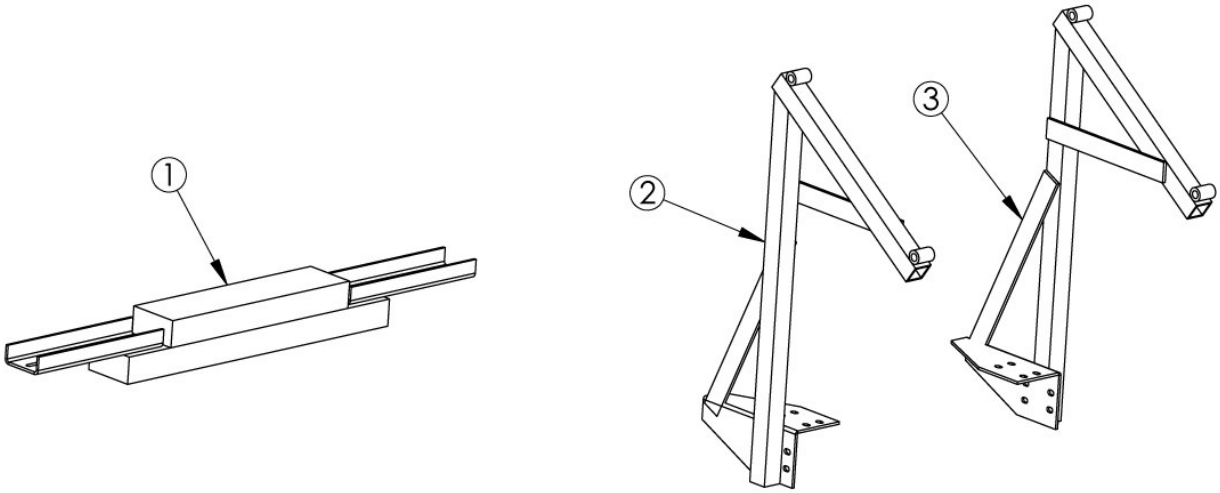

ITEM NO.	PART NUMBER	DESCRIPTION	QTY.
1	400081	Weight	1
2	158320	Left Mid Max Z	1
3	158330	Right Mid Max Z	1

	PART NUMBER	DESCRIPTION	QTY.
Weight Hardware	BOLT HH 38 4	3/8" X 4" HEX HEAD BOLT	2
	WASHER 38	3/8" FLAT WASHER	2
	NUT NYL 38	3/8" NYLOCK NUT	2
Catcher Hardware	BOLT HH 38 114	3/8" X 1 1/4" HEX HEAD BOLT	8
	NUT NYL 38	3/8" NYLOCK NUT	8
	WASHER 38	3/8" FLAT WASHER	8
	BP 228	5/16" SERRATED FLANGE NUT	4
	CPU 050 2.5	3/8" NYLOCK NUT	4
Intake Tube Hardware	BOLT PH 14 34	1/4" X 3/4" PAN HEAD BOLT	6
	NUT SF14	1/4" SERRATED FLANGE NUT	6